Appliance- / Carton Clamp T414-2L (23.11.2026)

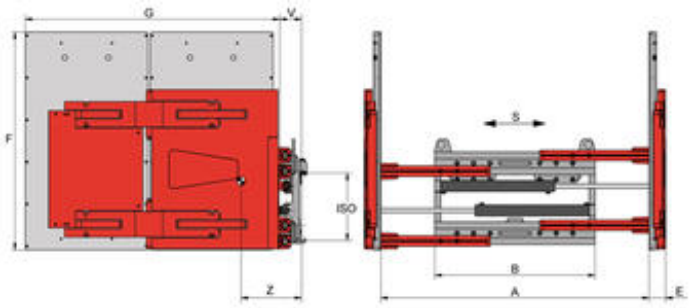

with independent sideshift - rubber coated arms - two contact pads per swivelling arm - 2 hydraulic functions

Model	Cap. kg	LCD mm	S mm	A mm	B mm	E mm	F mm	G mm	ISO	V mm	CofG Z mm	Weight kg	Price 人民币
1,5T414-2L	1.250	500	±100	480-1.660	970	60	1.000	1.000	2	133	345	495	On request
1,5T414-2L	1.250	500	±100	480-1.660	970	60	1.000	1.200	2	133	401	535	On request
1,5T414-2L	**1.250**	**500**	**±100**	**480-1.660**	**970**	**60**	**1.200**	**1.200**	**2**	**133**	**472**	**599**	**On request**
1,5T414-2L	**1.250**	**500**	**±100**	**480-1.660**	**970**	**60**	**1.200**	**1.380**	**2**	**133**	**492**	**647**	**On request**
1,5T414-2L	1.250	500	±100	330-1.430	1.040	60	1.000	1.000	2	133	344	497	On request
1,5T414-2L	1.250	500	±100	330-1.430	1.040	60	1.000	1.200	2	133	400	538	On request
1,5T414-2L	1.250	500	±100	330-1.430	1.040	60	1.200	1.200	2	133	470	602	On request
1,5T414-2L	1.250	500	±100	330-1.430	1.040	60	1.200	1.380	2	133	490	649	On request
1,5T414-2L	1.250	500	±100	410-1.590	1.040	60	1.000	1.000	2	133	344	497	On request
1,5T414-2L	1.250	500	±100	410-1.590	1.040	60	1.000	1.200	2	133	400	538	On request
1,5T414-2L	1.250	500	±100	410-1.590	1.040	60	1.200	1.200	2	133	470	602	On request
1,5T414-2L	**1.250**	**500**	**±100**	**410-1.590**	**1.040**	**60**	**1.200**	**1.380**	**2**	**133**	**490**	**649**	**On request**
1,5T414-2L	1.250	500	±100	490-1.840	1.130	60	1.000	1.000	2	133	341	507	On request
1,5T414-2L	1.250	500	±100	490-1.840	1.130	60	1.000	1.200	2	133	397	547	On request
1,5T414-2L	1.250	500	±100	490-1.840	1.130	60	1.200	1.200	2	133	467	611	On request
1,5T414-2L	1.250	500	±100	490-1.840	1.130	60	1.200	1.380	2	133	486	659	On request
1,5T414-2L	1.250	500	±100	470-1.870	1.200	60	1.000	1.000	2	133	340	516	On request
1,5T414-2L	1.250	500	±100	470-1.870	1.200	60	1.000	1.200	2	133	395	556	On request
1,5T414-2L	1.250	500	±100	470-1.870	1.200	60	1.200	1.200	2	133	465	620	On request
1,5T414-2L	1.250	500	±100	470-1.870	1.200	60	1.200	1.380	2	133	484	668	On request
2T414-2L	2.000	500	±100	525-1.725	970	60	1.000	1.000	2	143	337	565	On request
2T414-2L	2.000	500	±100	525-1.725	970	60	1.000	1.200	2	143	397	610	On request
2T414-2L	2.000	500	±100	525-1.725	970	60	1.200	1.200	2	143	428	674	On request
2T414-2L	2.000	500	±100	525-1.725	970	60	1.200	1.380	2	143	481	731	On request
2T414-2L	2.000	500	±100	525-1.725	970	60	1.000	1.000	3	143	337	565	On request
2T414-2L	2.000	500	±100	525-1.725	970	60	1.000	1.200	3	143	397	610	On request
2T414-2L	2.000	500	±100	525-1.725	970	60	1.200	1.200	3	143	428	674	On request
2T414-2L	2.000	500	±100	525-1.725	970	60	1.200	1.380	3	143	481	731	On request

Model	Cap. kg	LCD mm	S mm	A mm	B mm	E mm	F mm	G mm	ISO	V mm	CofG Z mm	Weight kg	Price 人民币
2T414-2L	2.000	500	±100	555-1.855	1.040	60	1.000	1.000	2	143	335	570	On request
2T414-2L	2.000	500	±100	555-1.855	1.040	60	1.000	1.200	2	143	395	615	On request
2T414-2L	2.000	500	±100	555-1.855	1.040	60	1.200	1.200	2	143	426	679	On request
2T414-2L	2.000	500	±100	555-1.855	1.040	60	1.200	1.380	2	143	479	736	On request
2T414-2L	2.000	500	±100	555-1.855	1.040	60	1.000	1.000	3	143	335	570	On request
2T414-2L	2.000	500	±100	555-1.855	1.040	60	1.000	1.200	3	143	395	615	On request
2T414-2L	2.000	500	±100	555-1.855	1.040	60	1.200	1.200	3	143	426	679	On request
2T414-2L	2.000	500	±100	555-1.855	1.040	60	1.200	1.380	3	143	479	736	On request
2T414-2L	2.000	500	±100	465-1.765	1.130	60	1.000	1.000	2	143	333	575	On request
2T414-2L	2.000	500	±100	465-1.765	1.130	60	1.000	1.200	2	143	392	620	On request
2T414-2L	2.000	500	±100	465-1.765	1.130	60	1.200	1.200	2	143	423	684	On request
2T414-2L	2.000	500	±100	465-1.765	1.130	60	1.200	1.380	2	143	476	741	On request
2T414-2L	2.000	500	±100	465-1.765	1.130	60	1.000	1.000	3	143	333	575	On request
2T414-2L	2.000	500	±100	465-1.765	1.130	60	1.000	1.200	3	143	392	620	On request
2T414-2L	2.000	500	±100	465-1.765	1.130	60	1.200	1.200	3	143	423	684	On request
2T414-2L	2.000	500	±100	465-1.765	1.130	60	1.200	1.380	3	143	476	741	On request
2T414-2L	2.000	500	±100	465-1.965	1.330	60	1.000	1.000	2	143	319	599	On request
2T414-2L	2.000	500	±100	465-1.965	1.330	60	1.000	1.200	2	143	378	644	On request
2T414-2L	2.000	500	±100	465-1.965	1.330	60	1.200	1.200	2	143	409	708	On request
2T414-2L	2.000	500	±100	465-1.965	1.330	60	1.200	1.380	2	143	462	765	On request
2T414-2L	2.000	500	±100	465-1.965	1.330	60	1.000	1.000	3	143	319	599	On request
2T414-2L	2.000	500	±100	465-1.965	1.330	60	1.000	1.200	3	143	378	644	On request
2T414-2L	2.000	500	±100	465-1.965	1.330	60	1.200	1.200	3	143	409	708	On request
2T414-2L	2.000	500	±100	465-1.965	1.330	60	1.200	1.380	3	143	462	765	On request
2T414-2L	2.000	500	±100	575-2.375	1.520	60	1.000	1.000	2	143	312	623	On request
2T414-2L	2.000	500	±100	575-2.375	1.520	60	1.000	1.200	2	143	371	668	On request
2T414-2L	2.000	500	±100	575-2.375	1.520	60	1.200	1.200	2	143	402	732	On request
2T414-2L	2.000	500	±100	575-2.375	1.520	60	1.200	1.380	2	143	455	789	On request
2T414-2L	2.000	500	±100	575-2.375	1.520	60	1.000	1.000	3	143	312	623	On request
2T414-2L	2.000	500	±100	575-2.375	1.520	60	1.000	1.200	3	143	371	668	On request
2T414-2L	2.000	500	±100	575-2.375	1.520	60	1.200	1.200	3	143	402	732	On request
2T414-2L	2.000	500	±100	575-2.375	1.520	60	1.200	1.380	3	143	455	789	On request

Add-on price for 100mm armlength / -height on request,
Possible with automatic pressure selection (upon request)
For contact pad coatings see accessories in the pricelist.
Also available without sideshift, model T404-2L
Load Backrest see model T179.

Appliance- / Carton Clamp T414-2L



Specification:

With the KAUP Appliance-/Carton Clamp

T414-2L wide loads with different load masses can be taken up. Because

with two contact pads per clamp arm this attachment is able to

compensate existing tolerance.

Qualities:

- Low lost load - very good residual capacities
- Good visibility conditions
- Independent sideshift serially
- Load backrest optionally