Carpet Carrying Ram T185 T (23.11.2026)

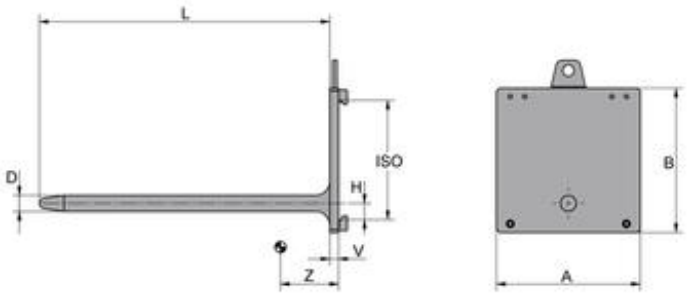

Model	D mm	A mm	B mm	H mm	L mm	Cap. kg	LCD mm	ISO	V mm	CofG Z mm	Weight kg	Add-on weight for 100mm ram length kg	Price 人民币	Add-on price per 100mm ram length 人民币
1T185T	45	500	500	55	1.000	530	500	2	30	93	76	1,25	On request	On request
1T185T	50	500	500	55	1.000	736	500	2	30	114	78	1,54	On request	On request
1T185T	55	500	500	55	1.000	980	500	2	30	128	81	1,86	On request	On request
1,5T185T	60	500	500	55	1.000	1.272	500	2	50	113	124	2,22	On request	On request
1,5T185T	65	500	500	55	1.000	1.614	500	2	50	123	128	2,60	On request	On request
2T185T	70	500	500	55	1.000	2.020	500	2	50	133	132	3,02	On request	On request
2T185T	75	500	500	55	1.000	2.484	500	2	50	143	135	3,46	On request	On request
3T185T	80	600	600	55	1.000	3.012	500	3	50	119	190	3,94	On request	On request
3T185T	85	600	600	55	1.000	3.618	500	3	50	139	197	4,45	On request	On request
4T185T	90	600	600	55	1.000	4.284	500	3	60	139	230	4,99	On request	On request
4T185T	95	600	600	55	1.000	5.050	500	3	60	147	235	5,56	On request	On request
5T185T	100	600	760	50	1.000	5.890	500	4	60	155	240	6,16	On request	On request
6T185T	110	600	760	50	1.000	6.100	500	4	60	146	300	7,46	On request	On request
7T185T	120	600	760	120	1.000	7.868	500	4	80	136	382	8,88	On request	On request
8T185T	130	600	760	120	1.000	10.066	500	4	80	154	400	10,42	On request	On request

Ram length to be at least 2/3 of roll length
Other ISO-classes than indicated are available upon request.

Carpet Carrying Ram T185 T

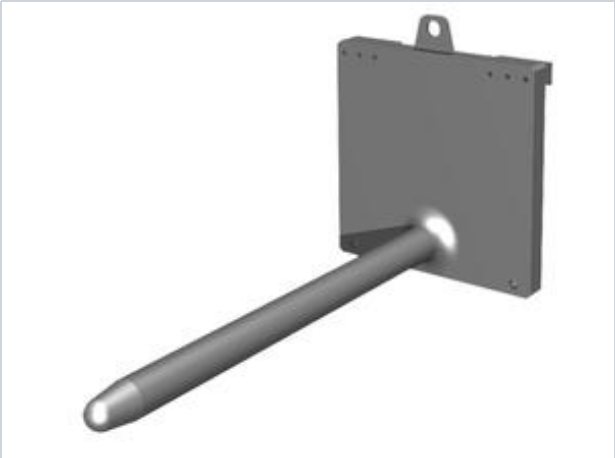



Specification:

Carpet rolls with a small inner diameter

can be easily transported with a KAUP Carpet Carrying Ram T185T. The

length of the long thin ram should be at least 2/3 of the length of the

carpet to be transported. This means that a ram with a length of 3.500

mm can transport a carpet with a length of 5.000 mm.

Qualities:

- Manufactured from steel with high tensile and yield strength
- Solid design
- Mounted directly on to the fork carriage
- Optionally to slip-on forklift truck forks
- Variation for handling Big Bags available