Foldable forks T180KH (23.11.2026)

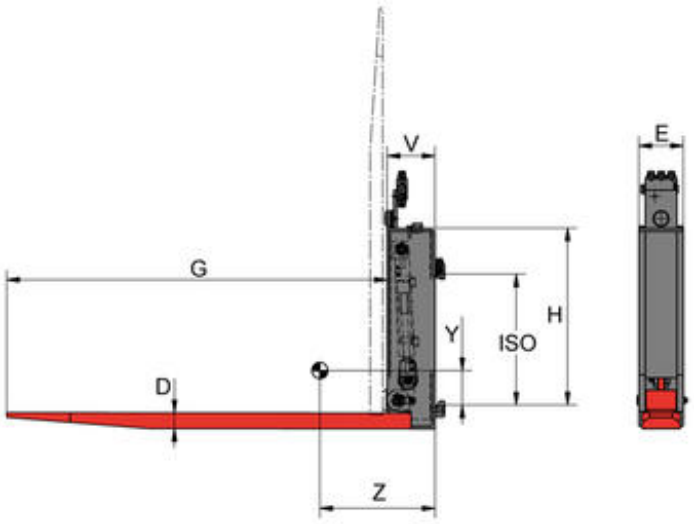

for mounting on ISO fork carriage - hydraulically foldable - 1 hydraulic function

Model	Cap. per fork pair kg	LCD mm	E mm	D mm	G mm	H mm	ISO	V mm	CofG Z mm	Weight per piece kg	Price per piece 人民币
1T180KH	1.500	500	120	40	1.000	535	2	150	284	80	On request
2T180KH	2.500	500	140	50	1.000	620	2	150	300	100	On request
3T180KH	3.500	500	150	50	1.000	770	3	185	303	132	On request

Higher capacities available upon request.

Foldable forks T180KH

Specification:

The Foldable Forks T180KH of KAUP are

used where shortage of space (for example lift use) or internal

transport makes it sometimes necessary to fold on the forks. For it the

forks are hung up directly in the fork carriage and are opened

hydraulically.

Moreover, the foldable forks can also be combined with other attachments of KAUP, for example bale clamps.

Qualities:

- Robust construction
- An easy assembly
- Very good visibility conditions