Rotating Roll Arms T106AH90 (23.11.2026)

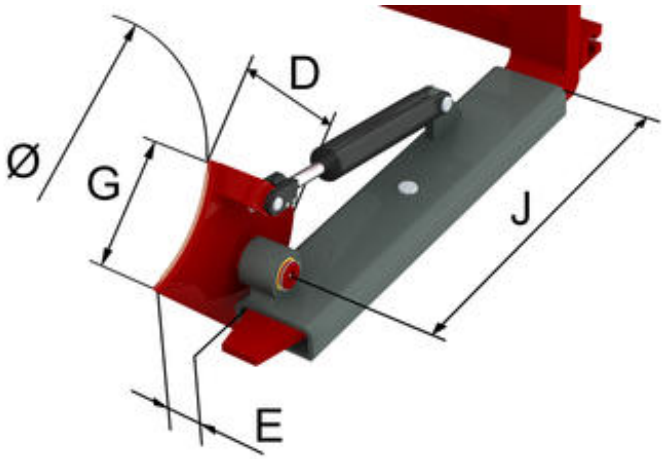

slip-on version - hydraulically turnable up to 90°, 1 hydraulic function

Model	Number of hydr. arms	For Ø mm	G mm	D mm	Arm-overhang per side. E1) mm	Min. distance to fork back J2) mm	Weight kg	Price per pair 人民币
2T106AH90	1	560-630	400	250	120	700	102	On request
2T106A-2H90	2	560-630	400	250	120	700	132	On request
4T106A-2H90	2	560-630	400	250	120	700	140	On request

1) Arm-overhang per side.
2) Minimum distance to fork shank
Rotating roll arms for other diameters available upon request.
special designs available for transportation of plastic drums (upon request)

Rotating Roll Arms T106AH90



Specification:

KAUP Rotating Roll Arms T106AH 90° are used when cylindrical loads are only occasionally picked up and tilted or turned.

Qualities:

- Simple assembly
- Solid construction
- Other drum diameters available
- Hydraulically turnable by 90° Adaption for drum handling possible