Rotating Roll Arms T106AH180 (24.11.2026)

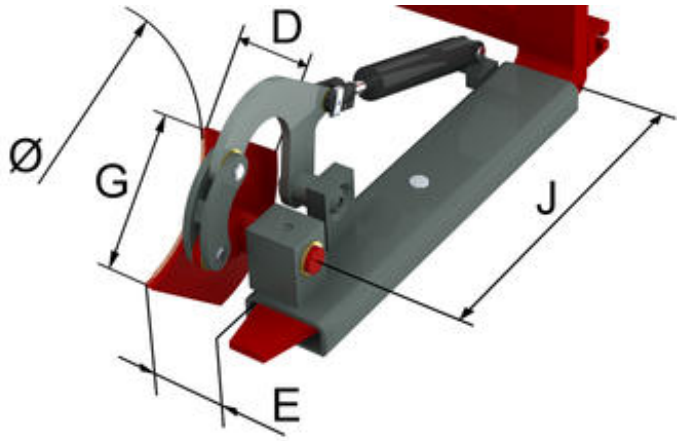

slip-on version - hydraulically turnable up to 180°, 1 hydraulic function

Model	Number of hydr. arms	For Ø mm	G mm	D mm	Arm-overhang per side. E[1] mm	Min. distance to fork back J[2] mm	Weight kg	Price per pair 人民币
2T106AH180	1	560-630	400	250	180	800	120	On request
2T106A-2H180	2	560-630	400	250	180	800	148	On request
4T106A-2H180	2	560-630	400	250	180	800	158	On request

1) Arm-overhang per side.
2) Minimum distance to fork shank
Rotating roll arms for other diameters available upon request.
special designs available for transportation of plastic drums (upon request)

Rotating Roll Arms T106AH180



Specification:

Cylindrical loads can be picked up and turned by 180° and completely emptied with KAUP Rotating Roll Arms T106AH 180°.

Qualities:

- Simple assembly
- Solid construction
- Other drum diameters available
- Hydraulically turnable by 180° Adaption for drum handling possible