# Bale Arms T103AG (24.11.2026)

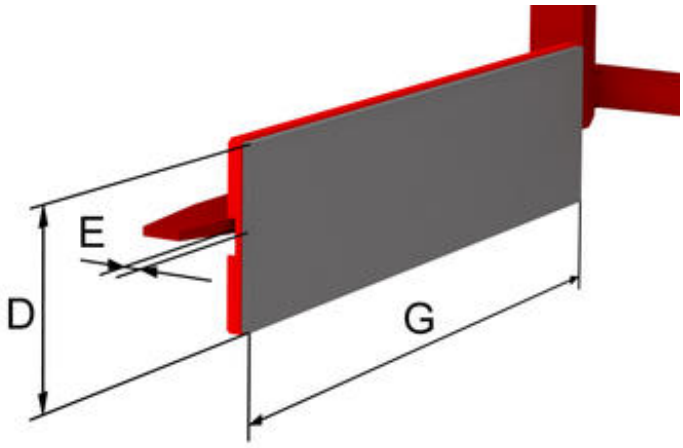


gripping nap strap coated, slip-on version

| Model | G mm | D mm | Reduction of opening range per side E mm | Weight kg | Price per pair 人民币 | Add-on price per 100mm length 人民币 | Add-on price per 100 mm increased height 人民币 |
|---|---|---|---|---|---|---|---|
| **1T103AG** | 700 | 200 | 25 | 38 | On request | On request | On request |
| **2T103AG** | 800 | 400 | 25 | 64 | On request | On request | On request |
| **3T103AG** | 800 | 400 | 25 | 66 | On request | On request | On request |

# Bale Arms T103AG

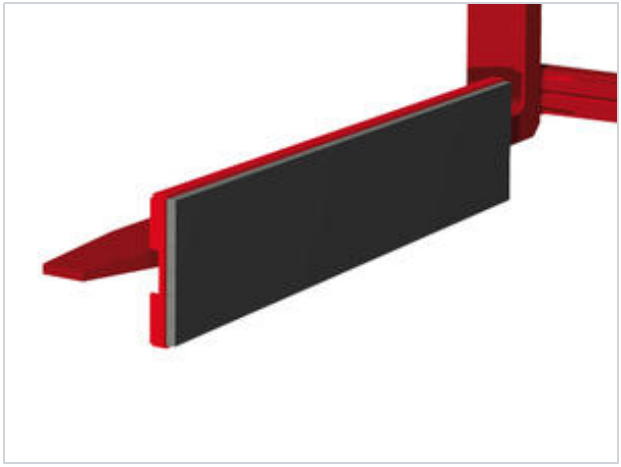

## Specification:

If bales, boxes, cartons and similar

goods need only be transported occasionally, then KAUP Bale Arms T103AG

are the right choice.

## Qualities:

- Simple assembly
- Solid construction
- Rubber coating on clamping arms
- Optionally other coatings available