Block Arms T102VP (24.11.2026)

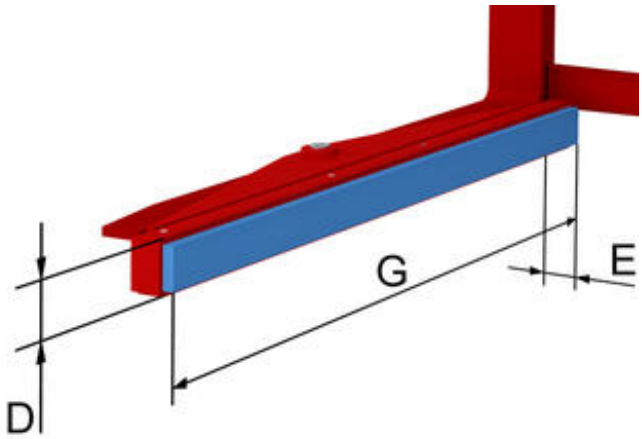

slip-on version with vulcollan linings

Model	G mm	D mm	Reduction of opening range per side E mm	Weight kg	Price per pair 人民币	Add-on price per 100mm length 人民币
1T102VP	**1.200**	**70**	**105**	**80**	**On request**	**On request**
2T102VP	**1.200**	**70**	**110**	**80**	**On request**	**On request**
3T102VP	**1.200**	**70**	**110**	**80**	**On request**	**On request**
1T102VP[1)]	1.200	150	105	108	On request	On request
2T102VP[1)]	1.200	150	110	108	On request	On request
3T102VP[1)]	1.200	150	110	108	On request	On request

1) Double high arms

Block Arms T102VP

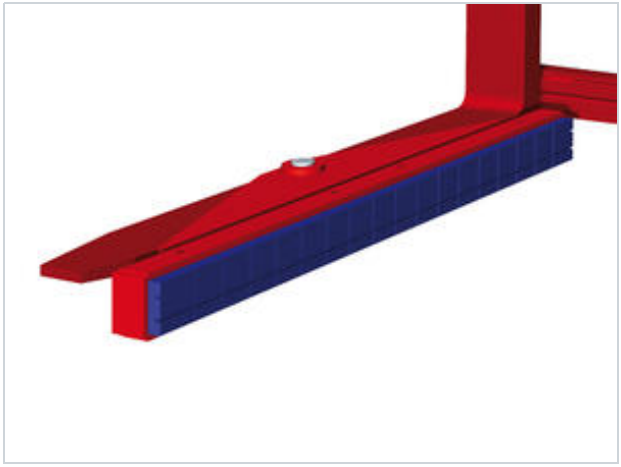

Specification:

KAUP underslung Block arms T102VP are

designed to clamp and transport packets of building blocks. If required

the height of the arms can be doubled.

Qualities:

- Simple assembly
- Solid construction